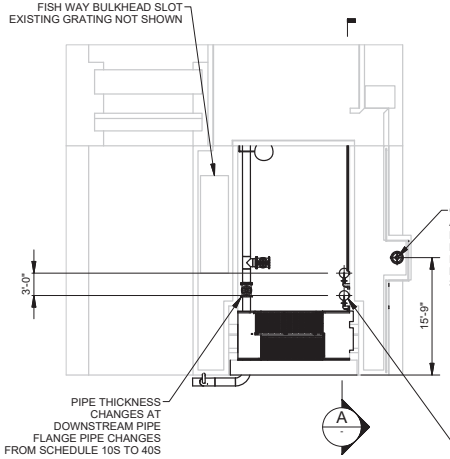

ABANDONED ICE AND TRASH CHUTE PLAN VIEW

SCALE: NTS

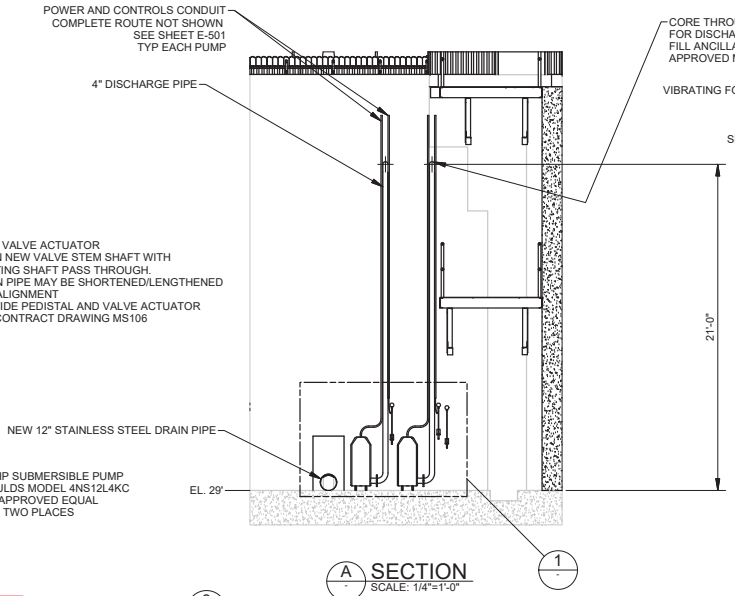

A SECTION
SCALE: 1/4"=1'-0"

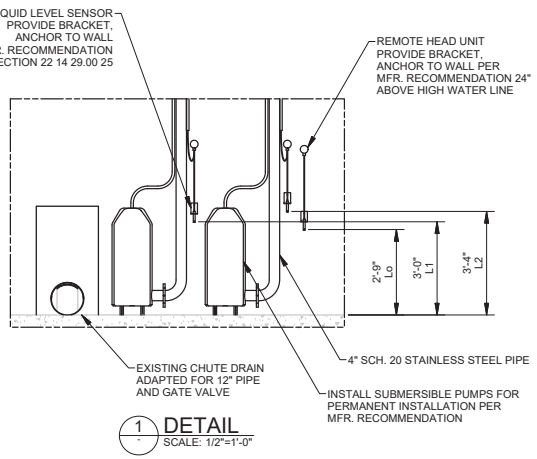

1 DETAIL
SCALE: 1/2"=1'-0"

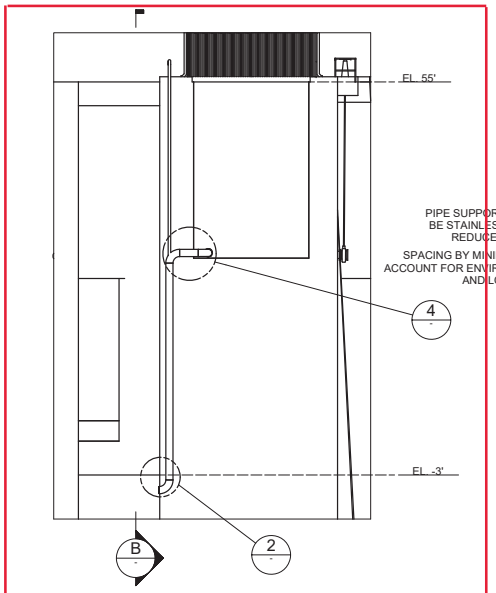

DISCHARGE PIPE ELEVATION VIEW

SCALE: NTS

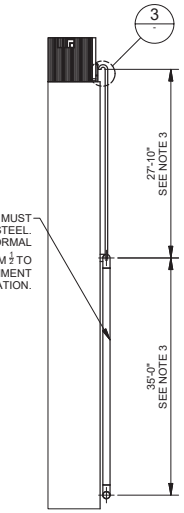

B SECTION
SCALE: NTS

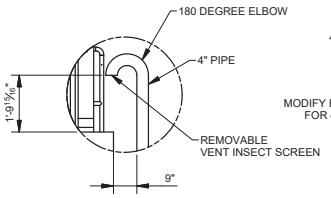

3 DETAIL
SCALE: 1/2"=1'-0"

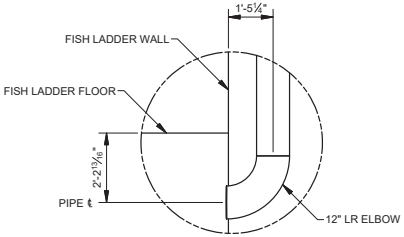

2 DETAIL
SCALE: 1/2"=1'-0"

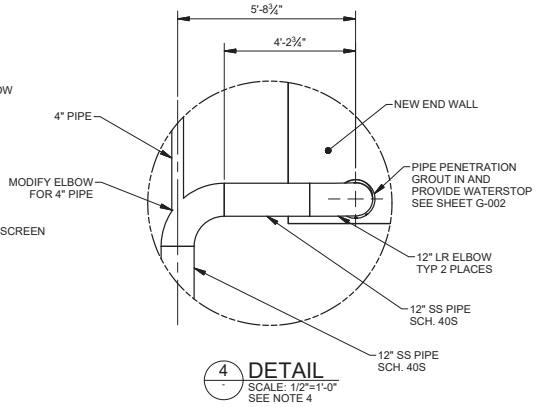

4 DETAIL
SCALE: 1/2"=1'-0"
SEE NOTE 4

NOTES:

1. SEE CONTRACT DRAWING G-002 FOR GENERAL MECHANICAL NOTES.

2. PROVIDE PUMPS WITH MFR. RECOMMENDED INSTALLATION SYSTEM. PROVIDE THREE SENSORS SET TO TURN THE PUMPS OFF AT MINIMUM PUMP SUBMERGENCE PLUS 2". MAXIMUM SUBMERGENCE MAY NOT EXCEED L2".

3. PROVIDE PIPE SUPPORTS PER MSS-SP-58 / 69. SUBMIT CALCULATIONS FOR APPROVAL.

4. WELD SCH. 10 AND SCH. 40S STAINLESS STEEL PIPE PER ASME B31.1/36.19.

SCALE: ½"= 1'-0"
12" 0 1' 2' 3' 4'

SCALE: ¼"= 1'-0"
12" 0 5'

DRAWING PLOT SIZE: ANSI D

US Army Corps of Engineers®
PORTLAND DISTRICT

MARK	DESCRIPTION	DATE	APPR.
	ADVERTISE		

DESIGNED BY: BRIAN BELL P.E.
DATE: 11/06/18
SOLICITATION NO.: W912PN18R0007
DWN BY: GEE,CORJ,S
CKD BY: GEE,CORJ,S
SUPERVISED BY: BRIAN BELL P.E.
CONTRACT NO.:
PLOT SCALE: 1:1
PLOT DATE: 11/28/2018
DRAWING NUMBER:
SIZE: ANSI D
FILE NAME: BGR.1125_MS107XXX.DWG

U.S. ARMY CORPS OF ENGINEERS
PORTLAND DISTRICT
PORTLAND, OREGON

BONNEVILLE LOCK AND DAM
SECOND POWERHOUSE
OIL-WATER SEPARATOR

HEAD COVER OWS
DETAILS II

SHEET IDENTIFICATION
MS107